SIEMENS

Technical Instructions

Document No. 155-522

June 16, 2015

Pressure Independent Control Series

Two-Way Cast Iron Flanged Bodies, ANSI 125 and 250

Description

Siemens Pressure Independent Control Valves integrate three functions into a single device: control valve, adjustable flow limiter, and automatic differential pressure regulator. They are available in both ANSI Class 125 and 250.

Features

- Control valve with integrated differential pressure regulator and adjustable flow limiter
- ANSI 125 and ANSI 250 bodies and flanges
- 2-1/2-, 3-, 4-, 5-, and 6-inch (65, 80, 100, 125, and 150 mm)
- Field adjustable presetting
- < ANSI Class IV leakage (0.01%)
- Pressure test (P/T) points
- Can be equipped with SAX, SAV, or SQV electromotoric actuators

Product Numbers

Table 1.

Product Number	ANSI Pressure Class	Line Size Inch (mm)	Maximum Flow Range GPM (m^3/h)	Δp Regulator Operating Range psi (kPa)
599-07310	125	2.5 (65)	19 to 110 (4.4 to 25)	3.6 to 90 (25 to 600)
599-07320	250			
599-07315	125		26 to 154 (6 to 35)	8 to 90 (55 to 600)
599-07325	250			
599-07311	125	3 (80)	24 to 150 (5.3 to 34)	3.6 to 90 (25 to 600)
599-07321	250			
599-07316	125		31 to 190 (7 to 43)	8 to 90 (55 to 600)
599-07326	250			
599-07312	125	4 (100)	55 to 300 (12 to 68)	5 to 90 (35 to 600)
599-07322	250			
599-07317	125		65 to 395 (15 to 90)	10 to 90 (70 to 600)
599-07327	250			
599-07313	125	5 (125)	85 to 485 (18 to 110)	5 to 90 (35 to 600)
599-07323	250			
599-07318	125		105 to 595 (23 to 135)	8 to 90 (55 to 600)
599-07328	250			
599-07314	125	6 (150)	115 to 650 (26 to 148)	5 to 90 (35 to 600)
599-07324	250			
599-07319	125		140 to 860 (32 to 195)	9 to 90 (62 to 600)
599-07329	250			

Application

- For use in heating, ventilating and air conditioning systems as a control valve
- For closed loop hot or chilled water applications

Caution Notations

CAUTION:	⚠	Equipment damage may occur if you do not perform a procedure as specified.

Specifications

Functional Data	Line size	2-1/2-inch (65 mm) to 6-inch (150 mm)
	Body style	Flanged
	Pressure class	ANSI 125 and ANSI 250
	Pressure regulation flow accuracy	± 5% from 10 to 90 psi (4- and 6-inch high flow from 15 to 90 psi) ±10% from Δp_{min} to 10 psi or 15 psi, as noted above.
	Valve characteristic	Linear
	Close-off	100 psi (700 kPa)
	Leakage rate	< Class IV (0 to 0.01% of nominal maximum flow)
	Operating direction	Normally open (push to close)
	Permissible media	Hot water, chilled water, water/glycol solution
	Medium temperature range	34°F to 248°F (1°C to 120°C)
	Nominal stroke	2-1/2-inch and 3-inch 3/4-inch (20 mm) 4 to 6-inch 1-1/2-inch (40 mm)
Materials	Valve body	Cast iron
	Stem, spring, seat	Stainless steel
	Plug	Brass (DZR)
	Regulator	Stainless steel
	Seals	EPDM (peroxide cured)
General ambient conditions	Temperature	
	Operation	5°F to 131°F (-15°C to 55°C)
	Transport	-22°F to 149°F (-30°C to 65°C)
	Storage	5°F to 122°F (-15°C to 50°C)
	Humidity	
	Operation	5 to 95% rh
	Transport	<95% rh
	Storage	5 to 95% rh
Miscellaneous	Canadian Registration Number	OH7645.5R1 (for 2-1/2-inch and 3-inch only)

Table 2. Cast Iron Valve Body Ratings.

Temperature		Pressure psig (kPa)			
°F	°C	ANSI Class 125		ANSI Class 250	
–20 to 150	–30 to 66	200	(1387)	500	(3447)
200	93	190	(1310)	460	(3171)
250	121	175	(1206)	415	(2861)
300	149	165	(1137)	375	(2585)
400	204	140	(965)	290	(1999)
450	232	125	(861)	250	(1723)

Table 3. Close-off Pressures for Electronic Actuators.

Valve Size In. (mm)	SAX Non-Spring Return		SAV		SQV	
	psi	kPa	psi	kPa	psi	kPa
2-1/2 (65)	100	700	100	700	100	700
3 (80)	100	700	100	700	100	700
4 (100)	–	–	100	700	100	700
5 (125)	–	–	100	700	100	700
6 (150)	–	–	100	700	100	700

Mechanical Design

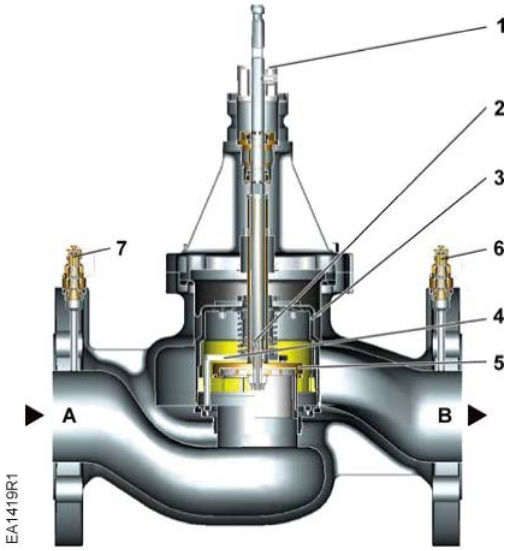

Figure 1.

1 Ring with dial for presetting

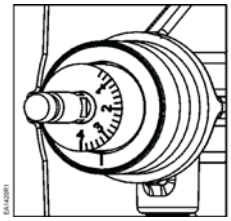

2 Aperture for the differential pressure regulator is linked with inlet port A

3 Differential pressure regulator

4 Flow limiter with variable presetting opening

5 Control valve

6 Pressure test point (P/T) at outlet port B, blue ribbon, P-

7 Pressure test point (P/T) at inlet port A, red ribbon, P+

A Inlet port A

B Outlet port B

Operation

The Pressure Independent Control Valves combine three functions (see Figure 2):

- a control valve (5) for controlling the volumetric flow,
- a field-adjustable flow limiter (4) with a dial (1) for a pre-settable maximum volumetric flow,
- a differential pressure regulator (3) that automatically adjusts to pressure fluctuations in the hydraulic system respectively across the control valve to maintain a constant flow.

The mechanical series-connected differential pressure regulator keeps the differential pressure constant across the control valve, thus maintaining constant flow. The desired maximum volumetric flow can be preset with the field adjustable flow limiter. The building automation system controller (not shown) and the actuator regulate the volumetric flow and consequently the desired temperature in buildings, rooms or zones.

Operation, continued

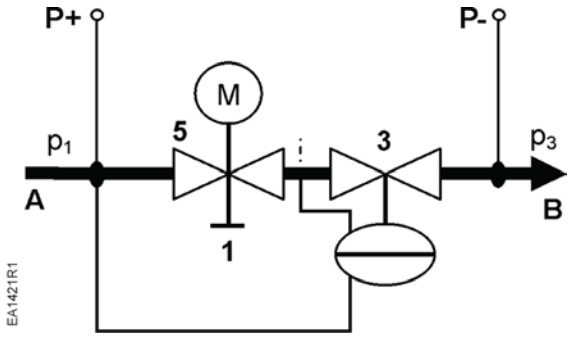

Figure 2. Pressure Independent Control Valve Operation.

A	Inlet medium (inlet port A)
B	Outlet medium (outlet port B)
1	Flow limiter with dial for presetting
3	Differential pressure regulator
5	Control valve with mounted actuator
P-	P/T port, pressure test point with blue ribbon (6)
P+	P/T port, pressure test point with red ribbon (7)
p_1	Pressure at inlet port A of PIC Valve
p_3	Pressure at outlet port B of PIC Valve

Medium Flow

The medium entering the Pressure Independent Control Valve (inlet port A) first passes through the variable presetting opening (4) which is connected to the ring with a dial (1) for presetting the desired maximum volumetric flow. The actuator (not shown here) opens and accurately positions the control valve. Then, the medium flows through control valve (5) with a linear characteristic.

Before leaving the Pressure Independent Control Valve (outlet port B), the medium passes through a built-in mechanical differential pressure regulator (3). This differential pressure regulator is the heart of the Pressure Independent Control Valve and ensures that the selected volumetric flow is maintained across the whole working range and independent of the inlet pressure p_1.

Pressure Test Points

The Pressure Independent Control Valve is equipped with two pressure test points (P+, P-) for measuring and monitoring the differential pressure across the valve during commissioning.

Manual Control

Manual control is only possible with a mounted actuator.

Advantages

The advantages of Pressure Independent Control Valves are:

- Once the flow limiter is set to design flow, the hydronic circuit self balances, even when changes to the system are made, such as additions.
- For any heat demand the Pressure Independent Control Valve with mounted actuator can be set to the desired volumetric flow and will remain constant regardless of pressure fluctuations in the system.

Constant flow regardless of pressure changes in the system leads to a more stable control, less wasted energy and greater comfort.

Volumetric Flow/ Dial Presetting

Tables to determine the dial setting for a desired volumetric flow.

Table 4. 2-1/2-Inch Valves Flow Rates.

Low Flow Valves P/N 599-07310, 599-07320			High Flow Valves P/N 599-07315, 599-07325		
Setting	Max. GPM	Max. m^3/h	Setting	Max. GPM	Max. m^3/h
4.0	110.0	25.0	4.0	154.0	35.0
3.8	102.1	23.2	3.8	143.2	32.5
3.6	94.7	21.5	3.6	133.0	30.2
3.4	87.7	19.9	3.4	123.4	28.0
3.2	81.3	18.5	3.2	114.4	26.0
3.0	75.3	17.1	3.0	105.9	24.1
2.8	69.7	15.8	2.8	98.0	22.3
2.6	64.5	14.6	2.6	90.6	20.6
2.4	59.6	13.5	2.4	83.6	19.0
2.2	55.0	12.5	2.2	77.0	17.5
2.0	50.6	11.5	2.0	70.6	16.0
1.8	46.4	10.5	1.8	64.5	14.6
1.6	42.2	9.6	1.6	58.5	13.3
1.4	38.0	8.6	1.4	52.5	11.9
1.2	33.7	7.7	1.2	46.4	10.5
1.0	29.2	6.6	1.0	40.1	9.1
0.8	24.5	5.6	0.8	33.4	7.6
0.6	19.3	4.4	0.6	26.2	6.0

Table 5. 3-Inch Valves Flow Rates.

Low Flow Valves P/N 599-07311, 599-07321			High Flow Valves P/N 599-07316, 599-07326		
Setting	Max. GPM	Max. m^3/h	Setting	Max. GPM	Max. m^3/h
4.0	149.8	34.0	4.0	189.5	43.0
3.8	137.6	31.3	3.8	175.2	39.8
3.6	126.5	28.7	3.6	162.2	36.8
3.4	116.4	26.4	3.4	150.1	34.1
3.2	107.1	24.3	3.2	139.1	31.6
3.0	98.7	22.4	3.0	128.9	29.3
2.8	91.0	20.7	2.8	119.4	27.1
2.6	83.9	19.1	2.6	110.5	25.1
2.4	77.3	17.6	2.4	102.2	23.2
2.2	71.1	16.1	2.2	94.2	21.4
2.0	65.2	14.8	2.0	86.5	19.6
1.8	59.5	13.5	1.8	79.0	17.9
1.6	53.8	12.2	1.6	71.5	16.2
1.4	48.2	10.9	1.4	63.9	14.5
1.2	42.4	9.6	1.2	56.2	12.8
1.0	36.5	8.3	1.0	48.2	10.9
0.8	30.2	6.9	0.8	39.8	9.0
0.6	23.5	5.3	0.6	30.9	7.0

Table 6. 4-Inch Valves Flow Rates.

Low Flow Valves P/N 599-07312, 599-07322			High Flow Valves P/N 599-07317, 599-07327		
Setting	Max. GPM	Max m^3/h	Setting	Max. GPM	Max m^3/h
4.0	300	68	4.0	395	90
3.8	273	62	3.8	360	82
3.6	250	57	3.6	327	74
3.4	229	52	3.4	298	68
3.2	210	48	3.2	272	62
3.0	194	44	3.0	250	57
2.8	179	41	2.8	230	52
2.6	166	38	2.6	212	48
2.4	154	35	2.4	196	45
2.2	143	32	2.2	181	41
2.0	132	30	2.0	168	38
1.8	122	28	1.8	154	35
1.6	112	26	1.6	141	32
1.4	102	23	1.4	128	29
1.2	91	21	1.2	114	26
1.0	80	18	1.0	99	23
0.8	67	15	0.8	83	19
0.6	55	12	0.6	65	15

Table 7. 5-Inch Valves Flow Rates.

Low Flow Valves P/N 599-07313, 599-07323			High Flow Valves P/N 599-07318, 599-07328		
Setting	Max. GPM	Max m^3/h	Setting	Max. GPM	Max m^3/h
4.0	485	110	4.0	595	135
3.8	446	101	3.8	550	125
3.6	412	94	3.6	511	116
3.4	382	87	3.4	475	108
3.2	355	81	3.2	443	101
3.0	330	75	3.0	414	94
2.8	308	70	2.8	387	88
2.6	286	65	2.6	361	82
2.4	266	60	2.4	336	76
2.2	246	56	2.2	312	71
2.0	227	52	2.0	288	66
1.8	207	47	1.8	264	60
1.6	188	43	1.6	240	55
1.4	167	38	1.4	215	49
1.2	147	33	1.2	188	43
1.0	125	29	1.0	161	37
0.8	104	24	0.8	132	30
0.6	85	18	0.6	105	23

Table 8. 6-Inch Valves Flow Rates.

Low Flow Valves P/N 599-07314, 599-07324			High Flow Valves P/N 599-07319, 599-07329		
Setting	Max. GPM	Max m^3/h	Setting	Max. GPM	Max m^3/h
4.0	650	148	4.0	860	195
3.8	610	139	3.8	796	181
3.6	571	130	3.6	737	167
3.4	533	121	3.4	683	155
3.2	497	113	3.2	632	144
3.0	462	105	3.0	586	133
2.8	429	98	2.8	542	123
2.6	398	90	2.6	501	114
2.4	367	83	2.4	463	105
2.2	338	77	2.2	427	97
2.0	310	70	2.0	392	89
1.8	282	64	1.8	358	81
1.6	255	58	1.6	324	74
1.4	228	52	1.4	291	66
1.2	201	46	1.2	256	58
1.0	173	39	1.0	220	50
0.8	143	33	0.8	182	41
0.6	115	26	0.6	140	32

Engineering Notes

CAUTION:

Install the valve so that the flow of the medium matches the direction of the arrow on the valve body. Failure to do so may damage the differential pressure regulator.

Recommendations

- A strainer or dirt trap should be fitted upstream of the valve to enhance reliability and service life.
- Remove dirt, welding beads, and so on from valves and pipes.
- Do not insulate the actuator bracket; air circulation must be ensured.

Mounting Notes

Pressure Independent Control Valves and actuators can be easily assembled on site. Neither special tools nor adjustments, besides the presetting, are required. Prior to mounting the actuator, the required volumetric flow must be set. Each valve is supplied with a bib tag indicating the maximum GPM flow for each setting of the flow limiter.

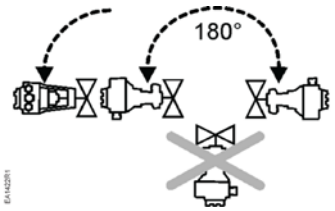

Figure 3. Accepted Mounting Positions.

Installation

- Install the valve so that the flow follows the direction of the arrow indicated on the valve body identification tag.
- For best performance, install the valve assembly with the actuator above the valve body. The valve and actuator can be installed in any position between vertical and horizontal. It is not recommended to install the valve assembly below horizontal or upside down.
- For flange dimensions and bolt hole information, see *Cast Iron Flange Dimensions for 2-1/2 through 6" Valves Technical Bulletin* (155-303P25 [TB 248]).
- Allow sufficient space for servicing the valve and actuator. See Table 9 for valve body dimensions, and dimensions of the service envelope recommended around the actuator.

NOTE: Instructions for field mounting an actuator, spring adjustments, wiring diagrams, and start-up are covered in the Technical Instructions and Installation Instructions for each actuator.

Presetting

It is recommended to mount the actuator before the presetting.

1. Mount the actuator in the desired orientation and tighten the valve neck coupling.
2. If using an SQV Actuator, slide the anti-rotation device over the stem with the open end guided by the actuator pillar. Do not tighten on valve stem.
3. Mount the valve stem coupling and tighten slightly.
4. Make the presetting as shown in Figure 4. Do NOT adjust presetting to a dial reading lower than 0.6. Use an open-ended, 7 mm wrench to turn the stem with dial to the desired presetting position.
5. Tighten the stem coupling.
6. Using a 2.5 mm hex wrench, tighten the SQV anti-rotation device onto the valve stem.

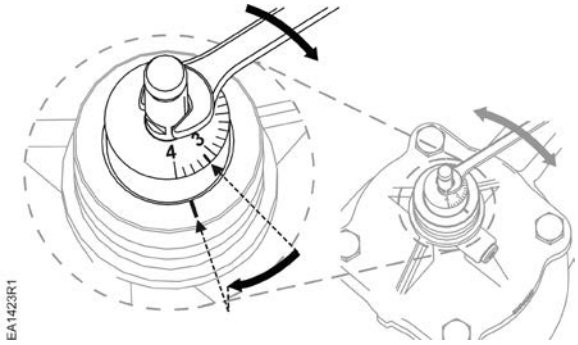

Figure 4. Volumetric Flow/Dial Presetting.

Valve Characteristic

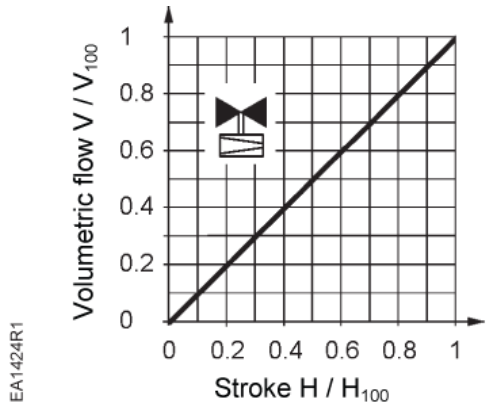

Figure 5.

Commissioning Notes

- The valves must be commissioned with the actuator correctly fitted.
- The Pressure Independent Control Valves must be open when flushing or pressure testing the system. Strong pressure impacts can damage closed Pressure Independent Control Valves.
- Differential pressure Δp_{max} across the valve's control path is not allowed to exceed 90 psi.

Manual Control

Manual control is only possible with a mounted actuator.

Maintenance Notes

The Pressure Independent Control Valves are maintenance-free.

When performing service work on the valve or actuator:

- Switch off the pump and disconnect the power supply.
- Close the shut-off valves in the piping network.
- Fully reduce pressure in the piping network and allow the pipes to cool down completely.

Remove the electrical connections only if necessary.

Stem Seals

The stem seals cannot be exchanged. In case of leakage, replace the entire valve.

Warranty

Application-related technical data are guaranteed only when the valves are used in connection with the Siemens actuators.

Siemens warranty is void, if used with non-Siemens actuators.

Dimensions

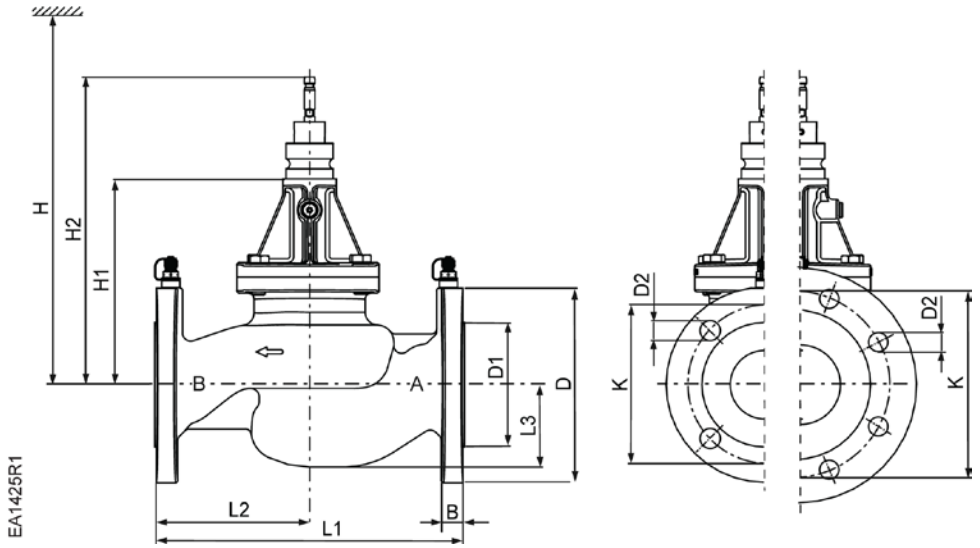

Table 9. Dimensions and Weights.

Product Number	Valve Size Inches (mm)	B	Ø D	Ø D1	Ø D2	L1	L2	L3	Ø K	H1	H2	H			Weight Pounds (kg)
												SAX	SAV	SQV	
599-07310 599-07315	2.5 (65)	0.69 (17.5)	7.01 (178)	N/A	0.75 (19)	10.87 (276)	5.43 (138)	3.11 (79)	5.50 (140)	7.68 (195)	11.42 (290)	25.08 (637)	—	26.93 (684)	42 (19)
599-07320 599-07325		1.00 (25.4)	7.48 (190)	4.96 (126)	0.88 (22.4)	11.50 (292)	5.75 (146)	3.31 (84)	5.88 (149.4)	7.68 (195)	11.42 (290)	25.08 (637)	—	26.93 (684)	56 (25.4)
599-07311 599-07316	3 (80)	0.75 (19)	7.50 (191)	N/A	0.75 (19)	11.75 (298)	5.87 (149)	3.75 (95.3)	6.00 (152)	8.52 (216,5)	12.32 (313)	25.95 (659)	—	23.86 (606)	62 (28.1)
599-07321 599-07326		1.12 (28,5)	8.25 (210)	5.69 (145)	0.88 (22.4)	12.5 (318)	6.26 (159)	3.88 (98.4)	6.62 (168)	8.52 (216.5)	12.32 (313)	25.95 (659)	—	23.86 (606)	82 (37.2)
599-07312 599-07317	4 (100)	0.98 (25)	9.00 (228.6)	N/A	0.75 (19)	13.86 (352)	7.40 (188)	4.49 (114)	7.5 (190.5)	13.07 (332)	19.23 (488.5)	—	31.38 (797)	32.32 (821)	123 (55.6)
599-07322 599-07327		1.14 (29)	10 (254)	6.94 (176.3)	0.88 (22.4)	14.40 (365.8)	7.63 (193.8)	4.61 (117)	7.88 (200.2)	13.07 (332)	19.23 (488.5)	—	31.38 (797)	32.32 (821)	156 (70.8)
599-07313 599-07318	5 (125)	0.98 (25)	10 (254)	N/A	0.88 (22.4)	15.75 (400)	8.07 (205)	5.30 (134.7)	8.50 (215.9)	14.06 (357)	15.63 (397)	—	34.06 (865)	35.00 (889)	170 (77.2)
599-07323 599-07328		1.52 (38.6)	10.9 (276.9)	8.31 (211.1)	0.88 (22.4)	16.62 (422.2)	8.51 (216.1)	5.50 (139.6)	9.25 (235)	14.06 (357)	15.63 (397)	—	34.92 (887)	35.87 (911)	221 (100)
599-07314 599-07319	6 (150)	1.05 (26.70)	11 (279.4)	N/A	0.88 (22.4)	17.76 (451)	9.17 (233)	6.15 (156.3)	9.50 (241.3)	15.79 (401)	17.48 (444)	—	36.06 (916)	37.01 (940)	235 (106)
599-07324 599-07329		1.58 (40.1)	12.5 (317.5)	9.69 (246.1)	0.88 (22.4)	18.62 (473)	9.61 (244)	6.34 (161.1)	10.63 (270)	15.79 (401)	17.48 (444)	—	36.93 (938)	37.87 (962)	303 (138)

øD1 = Raised area of flange
H = Total actuator height plus minimum distance to the wall or the ceiling for mounting, connection, operation, maintenance, etc.
H1 = Dimension from the pipe center to install the actuator (upper edge)
H2 = Valve in the «Open» position means that the valve stem is fully extended